MACAP®

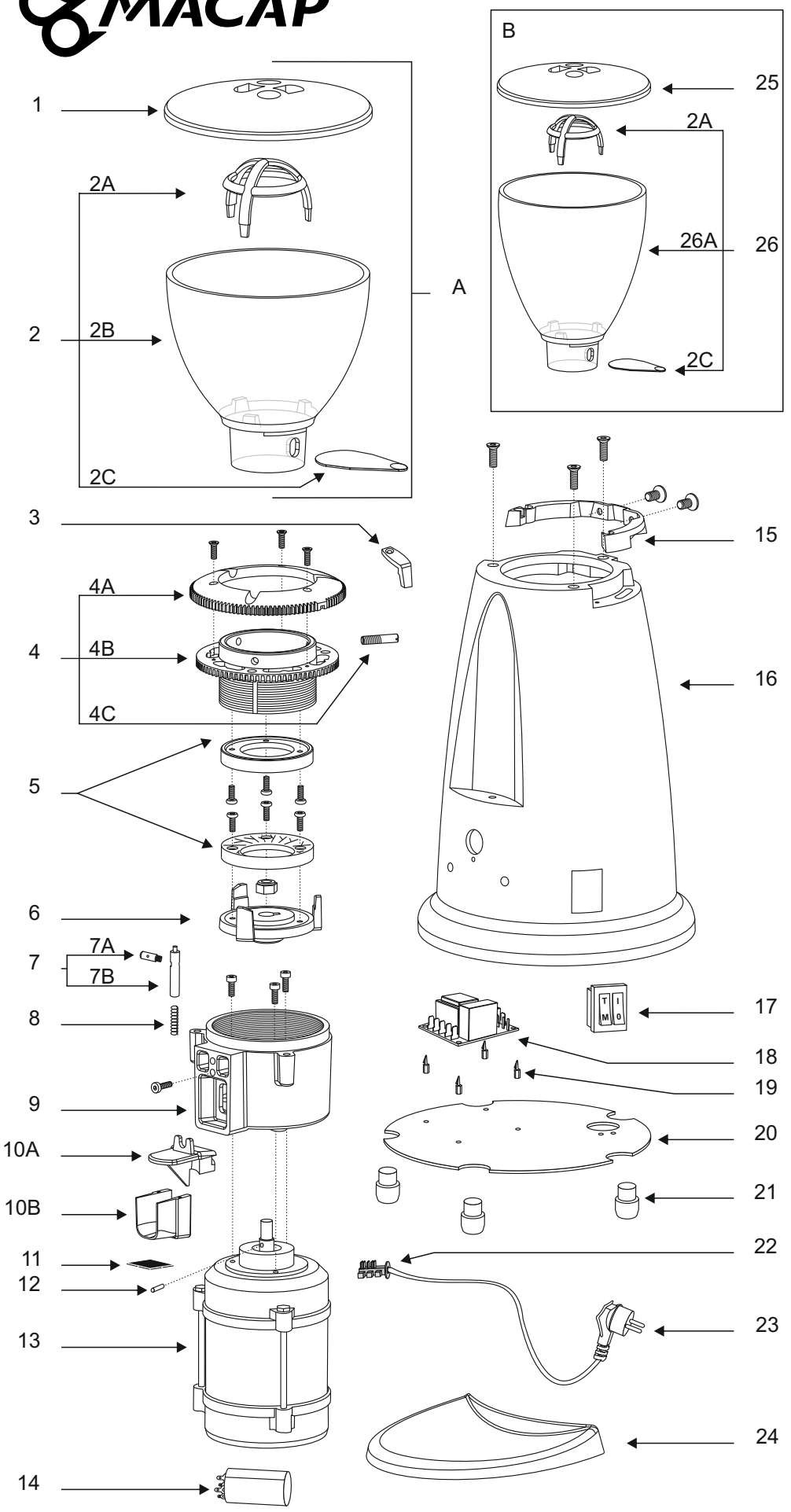

Model
M42M

Evol.	Table	Date
1	1/3	08/01/2018

	N.	Code	Features
	A	C00071635	
	B	C00071636	1Kg
	1	C00071638	
	2	C00071635A	
	2A	C00071637	
	2B	C00071635A1	
	2C	C0007M157C	
	3	C000716401	
	4	C00020102	
	4A	C00071640	
	4B	C00020102Z	
	4C	C0004M139	
	5	C0004M135A	
	6	C00020103	
	7	C00041338	
	7A	C244046	
	7B	C00041338B	
	8	C248044	
	9	C00010108	
	10A	C00020107A	
	10B	C00020107B	
	11	C247058	
	12	C00041349	
	13	C00061635	230V-50/60Hz
		C00061636	110V-60Hz
	14	C00061107	230V-50/60Hz 10µ
		C00061109	230V-50/60Hz 10µ
	15	C00071641	
	16	C00010109	
	17	C00061633	
	18	C00061638	230V-50/60Hz
		C00061638A	110V-60Hz
	19	C0007M172	
	20	C00041344	
	21	C00071614	
	22	C00061612	
	23	C00061517	SHUKO
		C000615171	USA
		C000615172	UK
		C000615173	SWITZERLAND
		C000615174	AUSTRALIA
		C000615175	BRAZIL
	24	C00071642	
	25	C00071639	
	26	C00071636A	1Kg
	26A	C00071636A1	1Kg

Descriptions	
	Available
	Not available

MACAP srl
Via Toniolo 18 - 30030 - Maerne - (VE) - Italy - Tel. +39 041 5030466 Fax +39 041 5030477
www.macap.it - www.dynamometrictamper.com - info@macap.it

Model
M42M

Evol.	Table	Date
1	2/3	08/01/2018

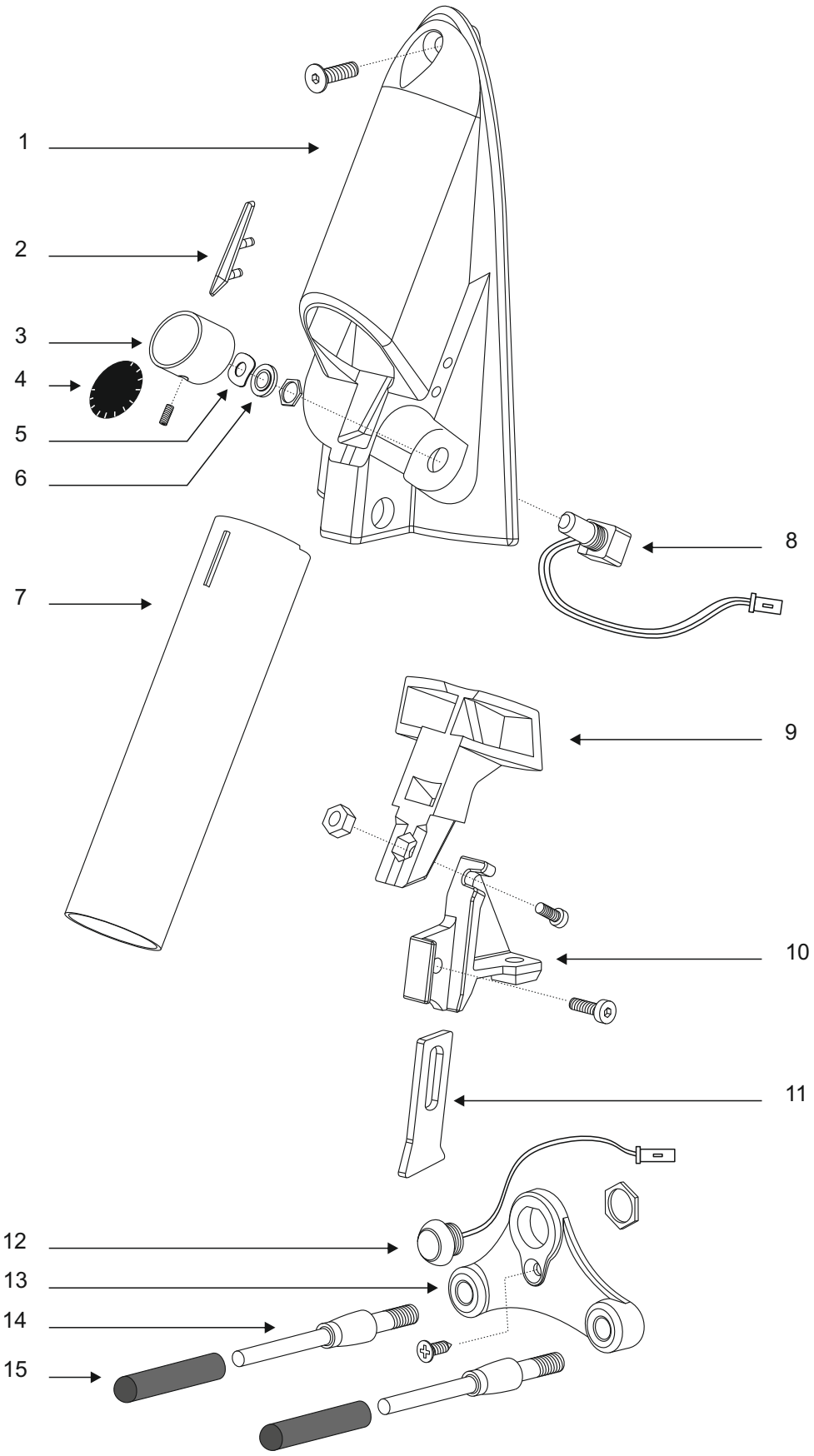

	N.	Code	Features
	1	C00071643	
	2	C00071644	
	3	C00041342	
	4	C00041342A	
	5	C00050120	
	6	C00071809	
	7	C00041347A	
	8	C00061642	
	9	C00071645	
	10	C00020105	
	11	C000413461	
	12	C0006M103	
	13	C00071646	
	14	C00041339	
	15	C00071802	

Descriptions	
	Available
	Not available

MACAP srl
Via Toniolo 18 - 30030 - Maerne - (VE) - Italy - Tel. +39 041 5030466 Fax +39 041 5030477
www.macap.it - www.dynamometrictamper.com - info@macap.it

Model
M42M

Evol.	Table	Date
1	3/3	08/01/2018

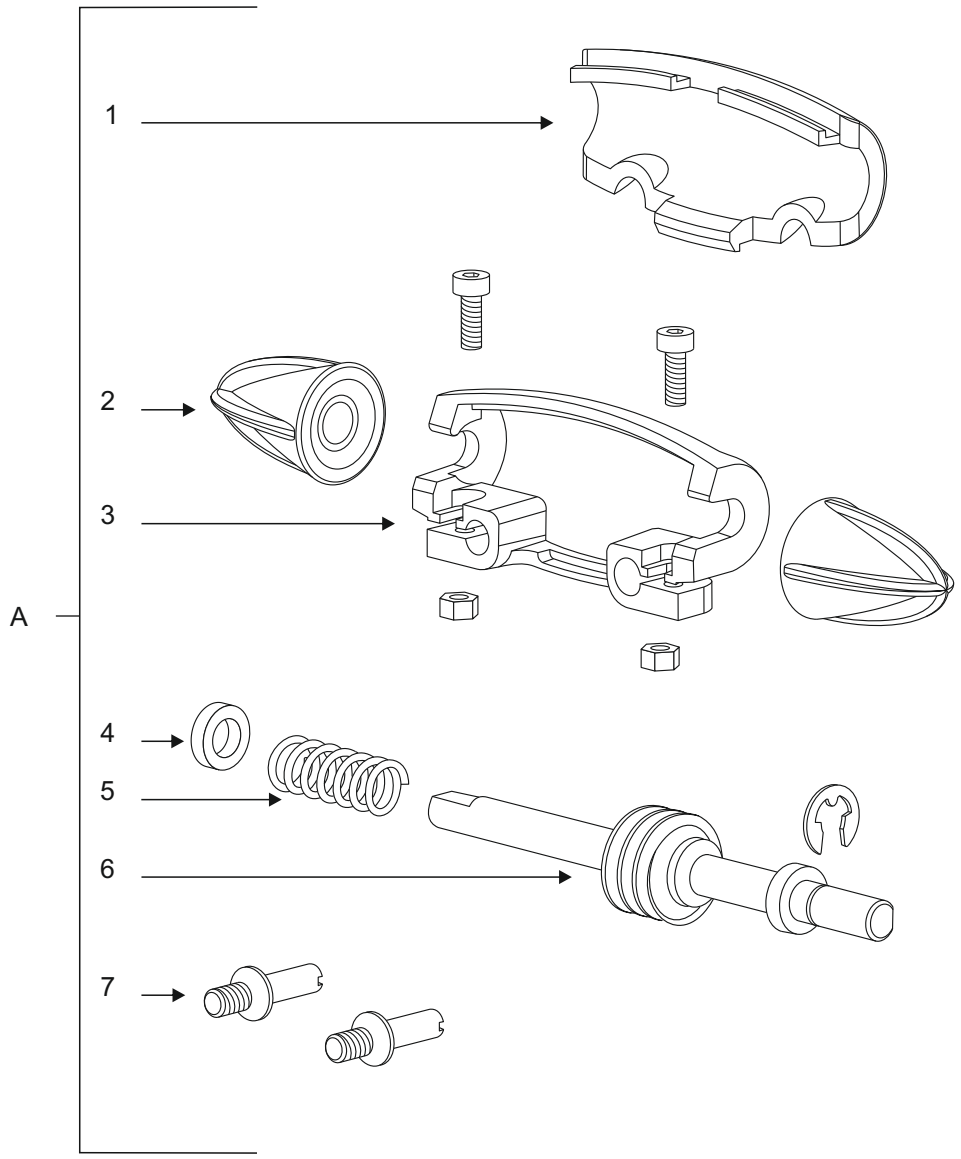

	N.	Code	Features
	A	C00071654	
	1	C00071649	
	2	C00071650	
	3	C00020104	
	4	C00050117	
	5	C000801100	
	6	C00041341	
	7	C00050118	

Descriptions	
	Available
	Not available

MACAP srl
Via Toniolo 18 - 30030 - Maerne - (VE) - Italy - Tel. +39 041 5030466 Fax +39 041 5030477
www.macap.it - www.dynamometrictamper.com - info@macap.it